9054 QFP Packaging

Plastic QFP 176pin Body Size 24 x 24 x 2.7mm

Symbol	Dimension in Millimeters		
	Min.	Nom.	Max
E	23.9	24	24.1
D	23.9	24	24.1
A			3
A_1		0.1	
A_2	2.6	2.7	2.8
e		0.5	
b	0.15	0.2	0.3
C	0.1	0.15	0.2
Theta	0°		10
L	0.3	0.5	0.7
L_1		1	
L_2		0.5	
H_E	25.6	26	26.4
H_D	25.6	26	26.4
$Theta_2$		15	
$Theta_3$		15	
R		0.2	
R_1		0.2	

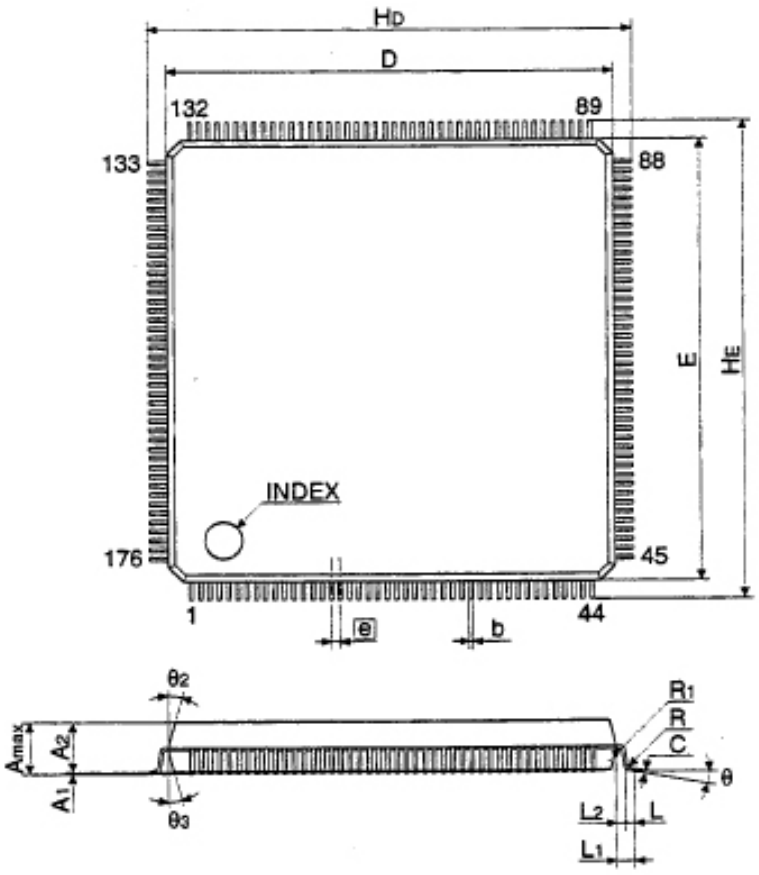

PLX Technology, Inc.
870 Maude Ave.
Sunnyvale, CA 94085 USA

Tel: 408 774 9060
Fax: 408 774 2169
Email: info@plxtech.com

© PLX Technology, Inc. All rights reserved. PLX and the PLX logo are registered trademarks of PLX Technology, Inc. ExpressLane, NetChip and FastLane are a trademark of PLX Technology, Inc., which may be registered in some jurisdiction. All other product names that appear in this material are for identification purposes only and are acknowledged to be trademarks or registered trademarks of their respective companies. Information supplied by PLX is believed to be accurate and reliable, but PLX Technology, Inc. assumes no responsibility for any errors that may appear in this material. PLX Technology, Inc. reserves the right, without notice, to make changes in product design or specification.